Cotswold Valves Ltd

27 Upper Mills Estate
Bristol Rd
Stonehouse
Glos.
GL10 2BJ
Tel 01453 826612
Fax 01453 827505

CV32D Product Manual

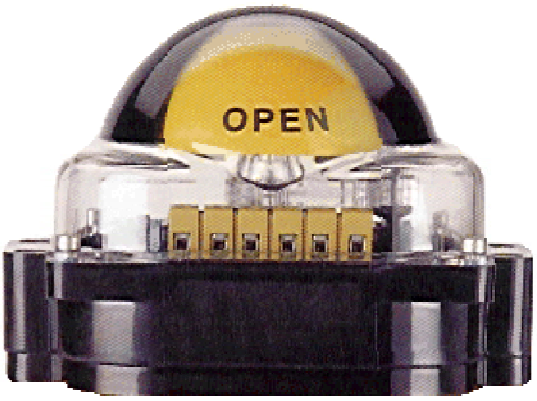

Overall Dimensions

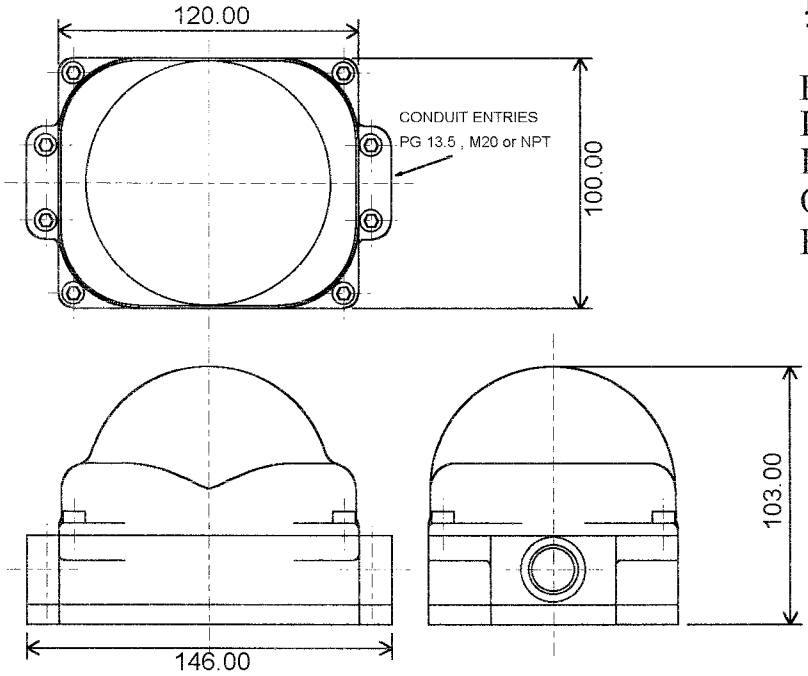

Materials of Construction

Enclosure	Polycabonate Lexan 121
Indicator	Polycarbonate Lexan 121
Interface Plate	Polycarbonate Lexan 121
O-Ring	Nitrile
Fasteners	Stainless Steel

View of cam adjusters

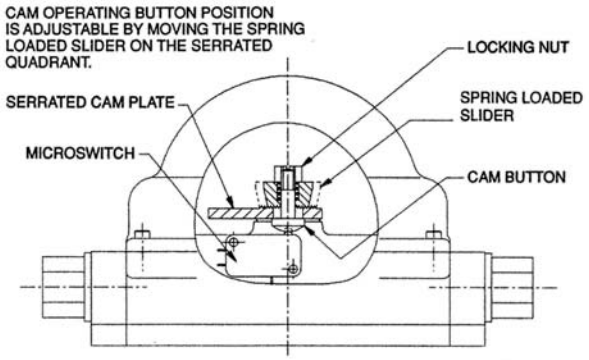

Total accessibility and simplicity provide rapid switch adjustment, once the lid and indicator dome are removed. The cam carrying sliders are spring loaded on splines, with the thumbscrew loosened the cam can be adjusted in seconds simply by lifting the slider and relocating it as required, re-tightening of the thumbscrew locks the slider in position and eliminates any possibility of creep.

CV32 Switchbox

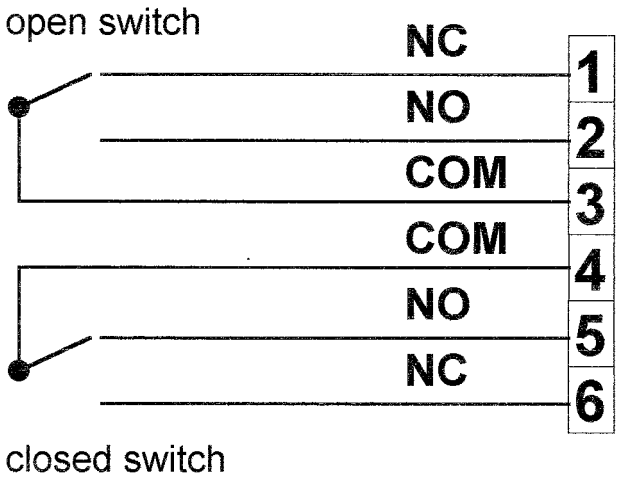

Containing 2 V3 Micro-switches
(Shown in closed position)

Wiring Diagram Ref:- WD01CV32

SGS United Kingdom Ltd.
Inspection & Engineering Services.

SGS House,
Johns Lane
Tividale
Warley
West Midlands
B69 3HX
Telephone:- 0121 520 6454
Telex:- 339118 SGSBHM
Telefax:- 0121 522 4116

NAMAS
TESTING
No. 0252

Report No. : **ES 25108** 29 October 1996

Client Ref. : 9319

Date Received : 10/10/96
Date Tested : 16/10/96

Client : **CeeVee Ltd**
Upper Mills Estate
Bristol Road
Stonehouse
Gloucestershire GL10 2BJ

For the attention of Mr J. Apperley

1-off Switchbox, CV3

This document supersedes all previously issued bearing the reference ES 25108

Written By : ..... S.D.Patel
Metallurgist.

Approved By : ..... P.G.Taylor
Section Leader - Product Testing.

Certified that the tests have been carried out in accordance with fully documented procedures which have been Namas Accredited.
Opinions and interpretations expressed herein are outside the scope of NAMAS Accreditation.

ALL ORIGINAL CERTIFICATION CARRIES AN EMBOSSED SEAL IN THIS SPACE.

Distribution:

1) Client
2) SGS File
3) -
4) -

INTRODUCTION

The above switchbox was received for testing to BS EN 60529 IP66 and IP67.

METHOD AND RESULTS

IP6X Dust Ingress

The switchbox was placed in the cabinet and 50μm talcum powder circulated around it for 8 hours.

After 8 hours the sample was opened and inspected for ingress of dust.

There was no ingress of dust.

IPX6 Water Ingress

The switchbox was subjected to a stream of water from a 12.5mm ID nozzle at a delivery rate of 100 l/min ± 5% from a distance of 3 metres for a period of 3 minutes per side making a total of 12 minutes.

The boxes were then dried, opened and inspected for ingress of water.

There was no ingress of water.

IPX7 Water Ingress

The switch box was emmersed in water to a depth of 1 metre and left for 30 minutes.

After 30 minutes the switch box was removed from the water, dried, opened and inspected for ingress of water.

There was no ingress of water.

CONCLUSIONS

The switchbox was acceptable to BS EN 60529 IP66 and IP67.